European Journal of Social Sciences Studies
ISSN: 2501-8590
ISSN-L: 2501-8590
Available on-line at: www.oapub.org/soc

DOI: 10.46827/ejsss.v5i3.861 Volume 5 | Issue 3 | 2020

IMPACT OF MEASUREMENT DRIVEN HR STATISTICS ON STRATEGIC HUMAN RESOURCE MANAGEMENT FUNCTIONS ON ORGANIZATIONAL PERFORMANCE IN INSURANCE INDUSTRY

Chandrasiri Gannile[1i],
Mohd Shukri Ab Yajid[2],
Ali Khatibi[3],
S. M. Ferdous Azam[4]

[1]Head of Human Resources and Administration,
People's Insurance PLC,
Sri Lanka,
PhD Candidate, Graduate School of Management,
Management & Science University,
Malaysia
[2]Prof. Dr., Graduate School of Management,
Management & Science University,
Malaysia
[3]Prof. Dr., Graduate School of Management,
Management & Science University,
Malaysia
[4]Dr., Graduate School of Management,
Management & Science University,
Malaysia

Abstract:
There is a gap between readiness and importance in HR statistics sphere. Even though importance is there for business firms, there is a capability gap for measuring tools of HR outcomes and firms' performance due to poor data quality lack to skills and inability of change (Tohmatsu, D. T., 2015). Despite the significant interest in human capital analytics (HCA), firms have tried to shift from operational reporting to data driven statistical tools which is now commonly used as Human Capital Analytics. This is mainly the result of the inability of involved teams to establish credible internal mechanisms and demonstrate capability and adding its value to the firm. This research will study the importance of establishing the impact of data driven statistical approach on organizational performance and suggest a method for its operationalization within a firm which requires working with related dimensions such as data quality, analytical competencies, and strategic ability to act and respond whilst focusing on people, process, and structure.

[i] Correspondence: email gannile1@gmail.com

Copyright © The Author(s). All Rights Reserved.
© 2015 – 2020 Open Access Publishing Group

Keywords: data quality, analytical competencies, strategic ability, people, process, structure, organizational capability, SHRM functions, indices, measures

1. Introduction

Currently many organizations are looking for metrics or analytics in HR which are not just related to people, but also on processes such as recruitment, retention, compensation, succession planning, benefits, training & development; in short analytics is becoming more popular as companies are doing lot of efforts to cultivate and align HCM with core business objectives in order to achieve a competitive fringe benefits.

HR statistics consists in a number of processes, enabling technology that use descriptive, visual and statistical methods to interpret people data and HR practice (Marler and Boudreau, 2017).

HR statistics is not only for gathering data on HR; instead, it aims to provide understanding into each process by using data to make relevant decisions, improve the processes and operational performance. HR collects enough data on employee's personal information, compensation, benefits, succession from time to time so it is important to use it properly to interpret the outcome and spots the trends.

Statistics is also used in HR to prepare cost and investment on their talent pool like cost per hire, HR statistics consists number of processes, enabling technology, that use descriptive, visual and statistical methods to interpret people data and HR practice (Marler and Boudreau, 2017).

Cost per participation on training, revenue and expense per employee provide opportunity for defining strategy for retention and hiring plan. It can also give a complete picture of an organizational head counts based on demographics: age, gender, geographical, departmental, qualifications (Minbaeva, D. B., 2018).

Big Data in HR refers to the use of the many data sources available in the organization, including those not traditionally thought of being related with HR; like: advanced analytic platforms, cloud based services; and visualization tools to evaluate and improve practices including talent acquisition, development, retention, and overall firms performance (Reddy, P. R., & Lakshmikeerthi, P., 2017).

HR statistics provides integrating and analyzing internal metrics and external benchmarks. Using these tools, HR department can make use of analytics and forecasting to make smarter and more accurate decisions, better measure inefficiencies and identify management blind spots (Charlwood, A., Stuart, M., & Trusson C., 2017).

Analyzing HR data has enabled many companies to both increase revenues by better knowledge and more accurately targeting customers and cut costs through improved business processes (Carlson, K. D., & Kavanagh, M. J., 2011).

Statistics has attracted the attention of human resource professionals where as they now can analyze mountains of structured and unstructured data to answer important questions regarding workforce efficiency, recruitment and selection and impact of training & development programs on firms performance, predictors of employee

attrition, and how to identify potential leaders (Ekwoaba, J. O., Ikeije, U. U., & Ufoma, N., 2015).

HR statistical process helps to understand, capture and predict the randomness of our world. It explains about spikes of uncertainty or hidden aspects in day-to-day HR processes, like recruitment or succession. Without it, we would not be able to calculate the ROI of HR initiatives (Gabčanová, I., 2012).

Measures, covering customer satisfaction, process effectiveness and employee development, as well as financial performance, employee performance, return on investment giving insides to each process by gathering data to take relevant each decision to improve the processes (Charlwood, A., Stuart, M., & Trusson, C., 2017).

HR statistics correlate business data and people; it helps to establish important connections. The main purpose of HR analytics is to submit data on the impact the HR department on organization and function in an organization in a given period. Business outcomes–based on HR statistics are a particular assessment of HR in a given period (Burkholder, N. C., Golas, S., & Shapiro, J. P., 2007).

HR has core functions which can be further improved through applications processes, in analytics. Some of these could be talent acquisition, optimization, performance management training and development, succession planning, attendance management, demographic and work floor management, future ready workforce paying and developing the workforce of the firm. HR analytics play a key role to dig into identify problems and issues, pit holes land minds in the current HR positions of the firm and guide the managers to find solutions and gain insights from analytical information available, then make appropriate decisions and take appropriate actions (Beechler, S., & Woodward, I. C., 2009).

HR analytics use statistical models and other techniques to analyze employee worker-related data, allowing business managers to improve the effectiveness of people-related decision-making and human resources strategy (Carlson, K. D., & Kavanagh, M. J., 2011).

2. Systems

Systems are defined firm's formal and informal procedures and systems that helps the strategy and structure (Peters & Waterman, 1982). Theoretical models assert that the effective human resources system of an organization support, in turn to create a positive impact on facilitating organization's performance (Herdman, A. O., 2017).

3. Staff

A firm is directly linked to the performance of those who work for that business. By the same principal, under-achievement can be a result of organization failures. Because hiring the wrong people or failing to anticipate fluctuations in hiring needs can be costly, it is important that conscious efforts are put into human resource planning (Biles &

Holmberg, 1980; Djabatey, 2012). It has also been argued that in order for the enterprise to build and sustain the competitive advantage, proper staffing is critical (Djabatey, 2012). Thus, recruitment and selection have become imperative in organizations because individuals need to be attracted on a timely basis, in sufficient numbers and with appropriate qualifications.

In human resource management, qualified staff is one of the most valuable resources. The ability of an organization to implement company strategic plan is largely dependent on its ability to recruit, select, place, appraise and develop appropriate employees. So, it's crucial for firms to exploit proper methods to recruit and retain qualified employees, and nurture, developed and maintain a high level of employees' morale and motivation among them (Kim, Lee, & Gosain, 2005; Metaxiotis, Zafeiropoulos, Nikolinakou, & Psarras, 2005; Skok & Legge, 2002; Umble et al., 2003; Verville et al., 2005; Willcocks & Sykes, 2000).

Dimensions of staff are mostly considered in one of two ways. At the hard end of the dimensions, elements, appraisals systems, pay scales, formal training programs, At the soft end, it is about staff morale, attitude, motivation and behavior (Herdman, A. O., 2008).

Firms who use people in the best manner best, rapidly shift their executives into positions with proper responsibility though various live support mechanism like assigned mentors, fast-track programs, and carefully articulated opportunities for reaching to top management are of their people management approach.

A firm is directly linked to the performance of those who contribute for that business. In the same manner, under-performance can be a cause of firm's failures. Whereas recruiting unmatched people or the inability to anticipate fluctuations in hiring needs can be expensive; therefore, it is important that carefull efforts are made into human resource planning (Biles & Holmberg, 1980; Djabatey, 2012). Similarly, it is argued that in order to build and sustain the competitive advantage, proper staffing is crucial for the organization (Djabatey, 2012). Thus, recruitment and selection have become imperative in the firm because individuals need to be attracted on a timely basis, in sufficient numbers and with appropriate qualifications. Firms staff, as a pool of resources to be nurtured, developed, guarded, and allocated is one of the many ways to turn the "Staff" dimension into firms performance dimension with management practice (Juilen & Phillips, 2014).

4. Skills

Skills development and development assets are important as a subsystem within the many activities of HR functions (Riggio, 2009). It is further highlighted that human resources are the most dynamic element of all resources of any organization (Riggio, 2009). Therefore, adequate attention and significance must be paid to train employee skills development and capabilities in the organization. Aamodt (2007) opine that skills

training is the preparation of individuals in a firm for a task, job or an occupation by getting specific skills needed. Training is usually inbuilt to the job rather than personal.

Armstrong (2003) affirms "*employee development is a wider area of skills and knowledge acquisition than training, it is more career-centered; it focused on developing individuals' potential rather than immediate skill; it sees personnel as flexible resources which are adjustable to situations*.

Fernando et al. (2020) argued that up-skilling and developing individuals will have a direct impact to the performance.

5. Organizational Performance

Many organizations face a volatile market situation. In order to create and sustain competitive advantage in this type of environment, organizations must continually improve their business performance. Increasingly, organizations are recognising the potential of their human resources as a source of sustained competitive advantage. Linked to this, more and more organisations are relying on measurement approaches, such as workforce scorecards, in order to gain insight into how the human resources in their organisation add value (Iqbal, A., 2019).

The increasing interest in measurement is further stimulated by a growing number of studies that show a positive relationship between human resource management and organizational performance. The relationship between HRM and firm performance has been a hotly debated topic over the last two decades, with the great bulk of the primary scientific research coming from the USA and, to a lesser extent.

In a world in which financial results are measured, failure to measure human resource policy and practice implementation dooms this to second-class status, oversight, neglect, and potential failure. The feedback from the measurements is essential to refine and further develop implementation ideas as well as to learn how well the practices are actually achieving their intended results (Combs, J., Liu, Y., Hall, A., & Ketchen, D., 2006).

6. Methodology

The methodology consists of a research framework, research process, research deign, defining of variables, sampling framework, sources of the questionnaire, providing hypotheses to be tested based on the literature, theoretical and empirical findings. The information sources, types and methods of data analysis were included.

This study examines the impact of data driven statistics on organizational performance of insurance companies in Sri Lanka as well as examining whether the impact of statistical practices on organizational performance is contingent on organizations' people factor. A multi-respondent survey of 29 licensed insurance companies was undertaken and data collected was subjected to correlation analysis as well as descriptive statistics, applying SPSS and AMOS statistical tools in pursuance of the study's stated objectives. The stated research area was measured through a well

administered questionnaire which was developed based on SHRM functions and performance dimensions, systems, staff, skills, HR statistics, and organizational performance. The study is based literature survey; thus, it is a deductive research. The study is mainly based on primary data. The population is employees of insurance companies. The sample consists of 576 which is adequate for the study. The data was collected via a structured questionnaire. The questionnaire was shared to the respondents with online link, Google form and by email, depending on the situational requirement.

7. Analysis of Data

The analysis was based on the statistical analysis, findings of the survey instrument, data analysis and the final results of the research study. This would be depicted in charts and relevant tables.

The global talent market is more competitive than ever with the rise of new technologies, climbing costs of recruitment and increasing demand for new skills. To be successful in the rapidly changing market, HR needs to rethink their approach to statistical analysis on SHRM contribution of Organizational Performance (Global study by Oracle, 2018). The majority (80%) of organizations believe HR teams are already helping them to make better data-driven decisions which will be able to gain even bigger business benefits (Global study by Oracle, 2018).

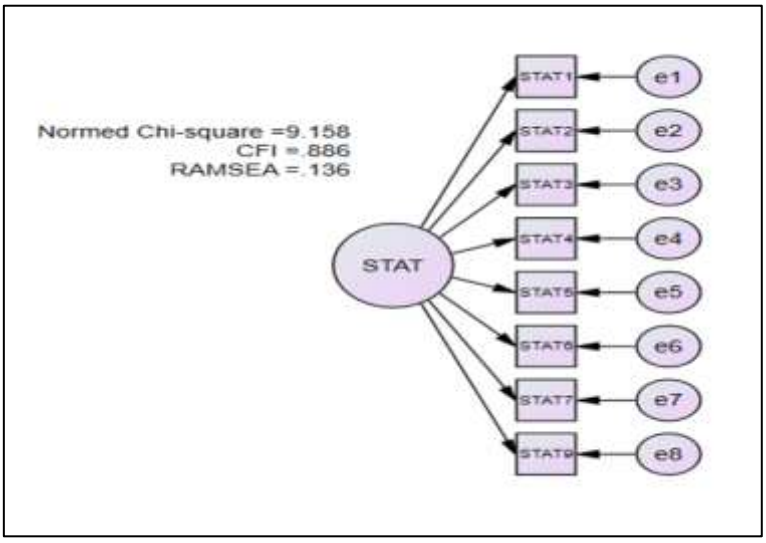

Figure 4.1: Initial Measurement Model for Constructs of Statistics

There are eight items (STAT1, STAT2, STAT3, STAT4, STAT5, STAT6, STAT7, STAT8) in the STAT construct. The descriptive summary and Inter-item correlations values for items in STAT construct were done . The Cronbach's alpha for STAT construct was 0.810, above the recommended cut-off 0.70 (De Vellis, 2003). The Inter item correlation matrix revealed the highest correlation values for STAT construct items were more than 0.3 (Hair, et al., 1998). As a result, no items were removed from the STAT

construct. Then, the entail measurement model for the STAT was constructed with eight items as shown in Figure 4.1.

The fit indices indicated a poor fit (CMIN/DF< 3.00, CFI< 0.3, and; RMSEA<0.08) in the Initial measurement model for STAT construct. Modification indices showed that the final model can be improved by allowing correlation of the items STAT6 and STAT7.

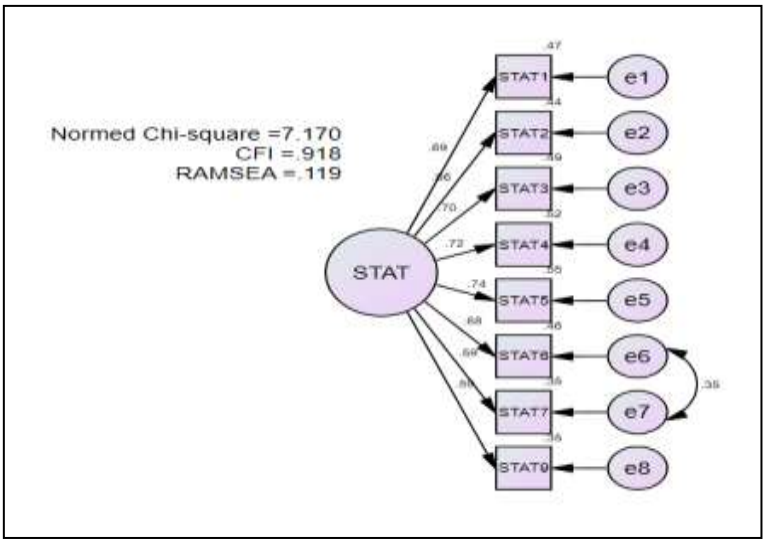

Figure 4.2: Corrected Measurement Model for Constructs of Statistics

The fit indices indicated a poor fit (CMIN/DF < 3.00, CFI< 0.3, and; RMSEA<0.08) in the Initial measurement model for STAT construct. Modification indices showed that the final model can be improved by allowing correlation of the items STAT1 and STAT4.

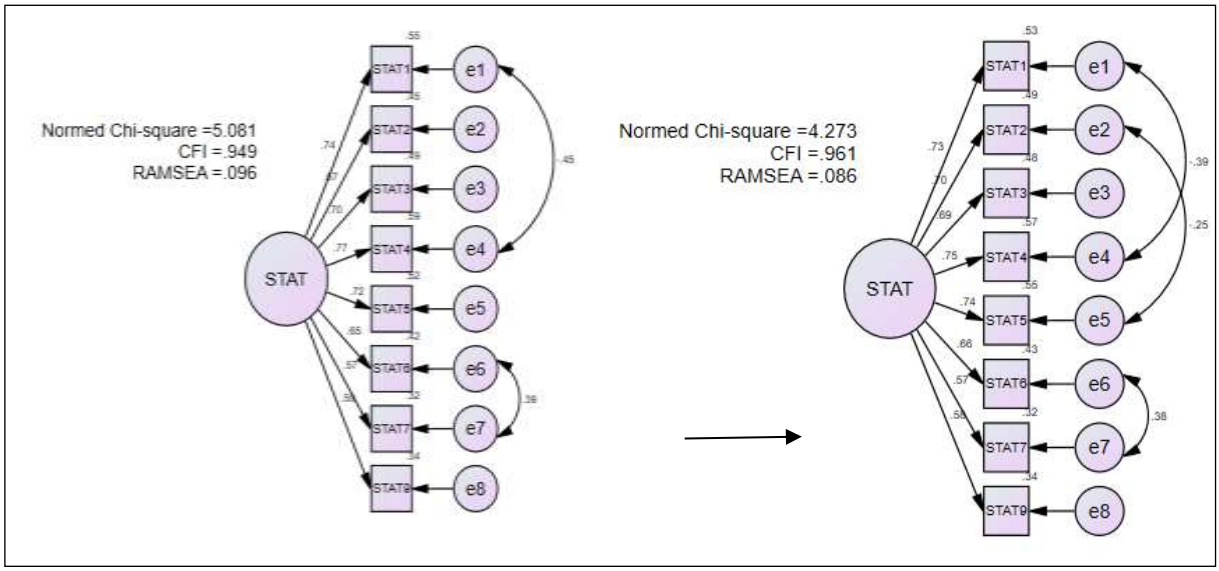

Figure 4.3: Corrected Measurement Model for Constructs of Statistics

The fit indices indicated a poor fit (CMIN/DF < 3.00, CFI< 0.3, and; RMSEA<0.08) in the Initial measurement model for STAT construct. Modification indices showed that the final model can be improved by allowing correlation of the items STAT2 and STAT5 as well as STAT7 and STAT8.

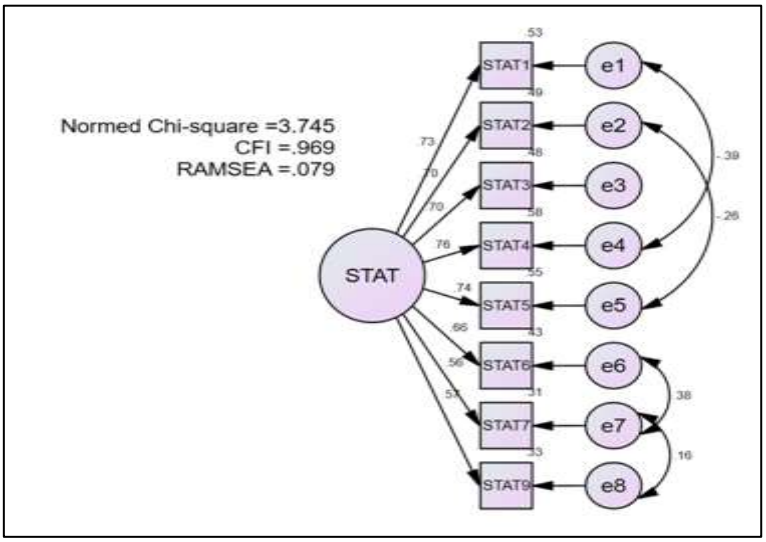

Figure 4.4: Final Measurement Model for Constructs of Statistics

However, the fit indices for CMIN/DF and RAMSEA were not obtained. Then the final model of the STAT construct aligned with the data evidenced by Normed Chi-square, CFI, and RMSEA were in the desired value (Chinna, 2013). Further, the factor loading of all the items was above .5, indicating adequate Individual item reliability (Hair, et al., 1995).

Table 4.1: Regression Weights and Reliabilities for the Items in the Statistics Construct

	Estimate	S.E.	C.R.	P
STAT1	1.000			
STAT2	.924	.069	13.451	***
STAT3	.854	.062	13.691	***
STAT4	.906	.071	12.722	***
STAT5	.938	.066	14.318	***
STAT6	.804	.062	12.945	***
STAT7	.853	.076	11.192	***
STAT9	.779	.068	11.465	***

In conclusion, statistics has a significant positive relationship with Organizational Performance.

The relationship between the Independent variable of statistics and the dependent variable of organizational performance. The results show that there is a positive influence between statistics and Adoption of organizational performance (β=0.15, $p < 0.05$). Statistics has a significant positive relationship with Organizational Performance. Thus, it is supported by the data.

8. Conclusion

As the hypothesis examines the relationship between organizational performance and adoption of HR statistics, the results showed that HR statistics had direct effect on organizational performance of all the main determinants. The results are consistent with previous studies

HR statistics are also known as application of talent analytics, data mining and techniques to human resources information and data. The objective of HR statistics is to give an organizational insights for effective use of human resources, as a result, business goals can be achieved promptly and efficiently. Role of human resources statistics is to identify which data to be taken and how to use the data to a model and to for see capabilities so that optimal return on investment on its human resources can be achieved. Firm can make use of statistics not only involve with collecting data on employee efficiency. But also, it projects to provide understanding into each process by collecting data and using them to make suitable and relevant decisions about how to improve the processes and decision making.

The level of implementation of practice of statistical review of SHRM functions is of small extent. For instance, on the issue of training, provide low support in term of financial resource. Also, low level of employee participation in decision making, no team working and poor coordination between top middle and low-level employee and large affecting the HR activities. It was also observed that, despite of existence of performance appraisal system the system works inefficiently due to lack of data driven reality check and low commitment from both employee and top managers. The study findings show that; HR strategy implementation, proper organizational structuring, talent acquisition, competency based employee assessment, training and development, leadership development, succession planning and career progression, employee profiling and work force planning, HR policy, processes, systems, organizational, employee rewards, compensation and benefits, performance appraisals, training and development, human resource planning, organization financial resourcing, employee participation and HRM implementation by managers, line managers are at large affecting the implementation of SHRM in insurance companies in Sri Lanka due to lack of measurement driven statistical tools This study was therefore, able to prove the hypotheses proposed and provide support to the existing theories.

References

Ak, R., & Öztayşi, B. (2009). Performance Measurement of Insurance Companies by Using Balanced Scorecard and ANP. *Istanbul Technical University, Istanbul*.

Ak, R., & Öztayşi, B. (2009). Performance measurement of insurance companies by using balanced scorecard and anp. In *International Symposium on the Analytic Hierarchy Process.(Hong Kong).*

Al Khajeh, E. H. (2018). Impact of leadership styles on organizational performance. *Journal of Human Resources Management Research*, *2018*, 1-10.

Armstrong, M. (2006). *A handbook of human resource management practice*. Kogan Page Publishers.

Armstrong, M. (2010). *Armstrong's essential human resource management practice: A guide to people management*. Kogan Page Publishers.

Armstrong, M., & Brown, D. (2019). Strategic Human Resource Management: Back to the future. Retrieved from https://www.employment-studies.co.uk/resource/strategic-human-resource-management-back-future

Armstrong, M., & Taylor, S. (2014). *Armstrong's handbook of human resource management practice*. Kogan Page Publishers.

Barros, C. P., Barroso, N., & Borges, M. R. (2005). Evaluating the efficiency and productivity of insurance companies with a Malmquist index: A case study for Portugal. *The Geneva Papers on Risk and Insurance-Issues and Practice*, *30*(2), 244-267.

Bassi, L. (2011). Raging debates in HR analytics. *People and Strategy*, *34*(2), 14.

Beechler, S., & Woodward, I. C. (2009). The global "war for talent". *Journal of international management*, *15*(3), 273-285.

Boon, C., Eckardt, R., Lepak, D. P., & Boselie, P. (2018). Integrating strategic human capital and strategic human resource management. *The International Journal of Human Resource Management*, *29*(1), 34-67.

Boxall, P. (2003). HR strategy and competitive advantage in the service sector. *Human Resource Management Journal*, *13*(3), 5-20.

Bryant, P. C., & Allen, D. G. (2013). Compensation, benefits and employee turnover: HR strategies for retaining top talent. *Compensation & Benefits Review*, *45*(3), 171-175.

Burkholder, N. C., Golas, S., & Shapiro, J. P. (2007). *Ultimate performance: Measuring human resources at work*. John Wiley & Sons.

Cania, L. (2016). The impact of strategic human resource management on organizational performance. Retrieved from http://www.management.ase.ro/reveconomia/2014-2/14.pdf

Carlson, K. D., & Kavanagh, M. J. (2011). HR metrics and workforce analytics. *Human resource information systems: Basics, applications, and future directions*, *150*.

Charlwood, A., Stuart, M., & Trusson, C. (2017). *Human capital metrics and analytics: assessing the evidence of the value and impact of people data*. Loughborough University.

Clark, I. (1999). Corporate human resources and "bottom line" financial performance. *Personnel Review*, *28*(4), 290-307.

Combs, J., Liu, Y., Hall, A., & Ketchen, D. (2006). How much do high-performance work practices matter? A meta-analysis of their effects on organizational performance. *Personnel psychology*, *59*(3), 501-528.

Council, E. R. W. C., Evans, D., Council, M. G. S. M. B., Panther, J., Council, A. D. W. C., Council, L. B. S. M. D., & Council, H. P. B. How Do We Develop the HR Business Partner Approach to Reflect the Increasingly Commercial Environment in Which We Operate?. Retrieved from http://aspirehrbp.org.uk/wp-

content/uploads/sites/51/2015/11/Business-Partnering-in-a-Commercial-Local-Government-Environment.pdf

Ekwoaba, J. O., Ikeije, U. U., & Ufoma, N. (2015). The Impact of Recruitment and Selection Criteria on Organizational Performance. Global Journal of Human Resource Management. Vol.3, No.2, pp.22-33. Retrieved from https://www.eajournals.org/wp-content/uploads/The-Impact-of-Recruitment-and-Selection-Criteria-on-Organizational-Performance.pdf

Epetimehin, F. M. (2011). Achieving competitive advantage in insurance industry: the impact of marketing innovation and creativity. *Journal of Emerging Trends in Economics and Management Sciences (JETEMS)*, *2*(1), 18-21.

Ferguson, K. L., & Reio Jr, T. G. (2010). Human resource management systems and firm performance. *Journal of Management Development*, *29*(5), 471-494.

Gabčanová, I. (2012). Human resources key performance indicators. *Journal of competitiveness*. Retrieved from https://www.researchgate.net/publication/269829585_Human_Resources_Key_Performance_Indicators

Githira, D. W. (2008). *Factors that influence diversification strategies of insurance companies in Kenya* (Doctoral dissertation).

Herdman, A. O. (2008). *Explaining the Relationship Between the HR System and Firm Performance: A Test of the Strategic HRM Framework* (Doctoral dissertation, Virginia Tech).

Herdman, A. O., Yang, J., & Arthur, J. B. (2017). How does leader-member exchange disparity affect teamwork behavior and effectiveness in work groups? The moderating role of leader-leader exchange. *Journal of Management*, *43*(5), 1498-1523.

Hu, X., Zhang, C., Hu, J. L., & Zhu, N. (2009). Analyzing efficiency in the Chinese life insurance industry. *Management Research News*, *32*(10), 905-920.

Iqbal, A. (2019). The strategic human resource management approaches and organisational performance. *Journal of Advances in Management Research*.

Jain, P. (2005). A comparative analysis of strategic human resource management (SHRM) issues in an organisational context. *Library review*, *54*(3), 166-179.

Jayakody, T., & Gamage, P. (2015). Impact of the emotional intelligence on the transformational leadership style and leadership effectiveness: Evidence from Sri Lankan national universities. *Journal of Strategic Human Resource Management*, *4*(1).

Kardt, R., Lepak, D. P. (2002). Strategic human capital and strategic human resource management. *The International Journal of Human Resource Management*, *29*(1), 34-67.

Karunarathna, K., & Weligamage, S. S. (2018). Impact of Strategic Human Resource Management on Organizational Performance of the Cable Industry in Sri Lanka. *Kelaniya Journal of Human Resource Management*, *13*(2).

Khan, R. A. G., Khan, F. A., & Khan, M. A. (2011). Impact of training and development on organizational performance. *Global Journal of Management and Business Research*, *11*(7).

Kibicho, P. M. (2014). Influence managerial competence and resource mobilization on strategy implementation in the insurance companies in Kenya. *International Journal of Social Sciences and Entrepreneurship*, *1*(10), 42-58.

Kibicho, P. M. (2015). *Determinants of strategy implementation in the insurance industry in Kenya* (Doctoral dissertation).

Kock, R., Roodt, G., & Veldsman, T. H. (2002). The alignment between effective people management, business strategy and organisational performance in the banking and insurance sector. *SA Journal of Industrial Psychology*, *28*(3), 83-91.

Kumar Piaralal, N., Mat, N., Kumar Piaralal, S., & Awais Bhatti, M. (2014). Human resource management factors and service recovery performance in Malaysian life insurance industry: Exploring the moderating effects of employment status. *European Journal of Training and Development*, *38*(6), 524-552.

Kundu, S. C., & Malhan, D. (2007). Human resource management practices in insurance companies operating in India: A Study. In *Proceedings of the 13th Asia Pacific Management Conference, Melbourne, Australia* (pp. 472-488).

Kwon, W. J. (2014). Human capital risk and talent management issues in the insurance market: Public policy, industry and collegiate education perspectives. *The Geneva Papers on Risk and Insurance-Issues and Practice*, *39*(1), 173-196 .

Lai, G. C., Chou, L. Y., & Chen, L. R. (2015). The impact of organizational and business strategy on performance and risk in the insurance industry. *Applied Finance and Accounting*, *1*(2), 107-128.

Liao, Y. S. (2005). Business strategy and performance: The role of human resource management control. *Personnel Review*, *34*(3), 294-309.

Little, G. (2017). Deloitte Human Capital Trends in Perspective: The Science of Organization Design and Operation. *Available at SSRN 2937125*.

Loo, L. H., & Beh, L. S. (2013). The effectiveness of strategic human resource management practices on firm performance in the Malaysian insurance industry. *International Journal of Academic Research in Business and Social Sciences*, *3*(5), 703.

Marler, J. H., & Boudreau, J. W. (2017). An evidence-based review of HR Analytics. *The International Journal of Human Resource Management*, *28*(1), 3-26.

Minbaeva, D. B. (2018). Building credible human capital analytics for organizational competitive advantage. *Human Resource Management*, *57*(3), 701-713.

Moideenkutty, U., Al-Lamki, A., & Murthy, Y. S. R. (2011). HRM practices and organizational performance in Oman. *Personnel Review*.

Nayak, B., & Bhattacharyya, S. S. (2019). Integrating digital wisdom and human capital. *The Journal for Quality and Participation*, *41*(4), 20-23.

Nikpour, A. (2017). The impact of organizational culture on organizational performance: The mediating role of employee's organizational commitment. *International Journal of Organizational Leadership*, *6*, 65-72.

Obeidat, B. Y., Abdallah, A. B., Aqqad, N. O., Akhoershiedah, A. H. O. M., & Maqableh, M. (2017). The Effect of Intellectual Capital on Organizational Performance: The Mediating Role of Knowledge Sharing.

Okusanya, A. O., & Oseji, A. S. (2012). Empirical Analysis of Sound Recruitment and Selection Criteria as a Tool of Organizational Efficiency. *J. Res. Natl. Dev*, *14*(1).

Oluoch, J. O. (2013). Influence of best human resource management practices on organizational performance: A case of college of humanities and social sciences university of Nairobi, Kenya. *Unpublished Thesis of Master of Arts in Project Planning and Management of the University of Nairobi*.

Piaralal, N. K., Mat, N., Piaralal, S. K., & Bhatti, M. A. (2014). Human resource management factors and service recovery performance in Malaysian life insurance industry: Exploring the moderating effects of employment status. *European Journal of Training and Development*, *38*(6), 524-552.

Reddy, P. R., & Lakshmikeerthi, P. (2017). HR analytics-An effective evidence based HRM tool. *International Journal of Business and Management Invention*, *6*(7), 23-34.

Rees, C. J., & Johari, H. (2010). Senior managers' perceptions of the HRM function during times of strategic organizational change: Case study evidence from a public sector banking institution in Malaysia. *Journal of Organizational Change Management*, *23*(5), 517-536. Kouhy, R., Vedd, R., Yoshikawa, T., & Innes, J. (2009). Human resource policies, management accounting and organisational performance. *Journal of Human Resource Costing & Accounting*, *13*(3), 245-263.

Saha, N., & Gregar, A. (2012). Human resource management: As a source of sustained competitive advantage of the firms. *International Proceedings of Economics Development and Research*, *46*(1), 1-5.

Shishi, N. K. P. N. M. To cite this document: Niriender Kumar Piaralal Norazuwa Mat Shishi Kumar Piaralal Muhammad Awais Bhatti (2014), Human resource management factors and service recovery performance in Malaysian life insurance industry, European Journal of Training and Development, Vol. 38 Iss 6 pp. 524-552 Permanent link to this document. *European Journal of Training and Development*, *38*(6), 524-552.

Singh, A. K., & Sorum, M. (2018). HR in Reinventing its Fundamental Practices to Gain Competitive Advantage: A Reflection of Innovative Performance Management Practices of HR in Indian Private Insurance Companies. *SMS Journal of Entrepreneurship & Innovation*, *4*(2), 43-59.

Singh, S., Darwish, T. K., Costa, A. C., & Anderson, N. (2012). Measuring HRM and organisational performance: concepts, issues, and framework. *Management Decision*.

Sparrow, P., & Cooper, C. (2014). Organizational effectiveness, people and performance: new challenges, new research agendas. *Journal of Organizational Effectiveness: People and Performance*, *1*(1), 2-13.

Sparrow, P., & Cooper, C. (2014). Organizational effectiveness, people and performance: new challenges, new research agendas. *Journal of Organizational Effectiveness: People and Performance*, *1*(1), 2-13. Sparrow, P., & Cooper, C. (2014). Organizational effectiveness, people and performance: new challenges, new research agendas. *Journal of Organizational Effectiveness: People and Performance*, *1*(1), 2-13 .

Tohmatsu, D. T. (2015). *Queensland Department of Education and Training: OneSchool-Investigation Into the 2015 Failure of the OneSchool Student Protection Module*. Deloitte Touche Tohmatsu.

Tomčíková, Ľ. (2016). The most important human capital trends in stage of globalization in current time. *Economy & Society & Environment*. (Deloitte Global Human Capital Report 2016)

Trevor, J. (2008). *Can Compensation be Strategic?: A Review of Compensation Management Practice in Leading Multinational Firms*. Judge Business School.

Ugheoke, S.O., Isa, M.F.M. & Noor, W.S.W. (2014). Assessing the Impact of Strategic Human Resource Management on Tangible Performance: Evidence from Nigerian SMEs. *International Review of Management and Business Research*, 3(2), 1163-1173.

Ulrich, D., Younger, J., Brockbank, W., & Ulrich, M. (2011). Competencies for HR Professionals Working Outside-In. *The RBL White Paper Series*

W. H. M Fernando, S. K. M. Yusoff, A. Khatibi, S. M. F. Azam (2019). Human Capital Impact on Organizational Performance: Special Reference to the Banks in Sri Lanka European Journal of Social Sciences Studies 5 (1), 99-115.

W. H. M. Fernando, S. K. M. Yusoff, A. Khatibi, S. M. F. Azam (2020). A Review on Human Capital; Two Principal Ideas Predominantly Generic Human Capital and Specific Human Capital for Organizational Performance. European Journal of Economic and Financial Research 3 (5), 35-47.

W. H. M. Fernando, S. K. M. Yusoff, A. Khatibi, S. M. F. Azam, S. R. S. N. Sudasinghe, (2020). Human Capital Practices' Impact on Organizational Performance. European Journal of Human Resource Management Studies 4 (2), 1-19.

Wang, Z., Chen, J., Shih, H. A., & Chiang, Y. H. (2005). Strategy alignment between HRM, KM, and corporate development. *International Journal of Manpower*.

Welch, J. (2019). Thoughts about AHRM Departments, *Capital*, 27(4), 198-1997.

Wright, P. M., & Ulrich, M. D. (2017). A road well-traveled: The past, present, and future journey of strategic human resource management. *Annual Review of Organizational Psychology and Organizational Behavior*, *4*, 45-65.

Zaraket, W. S., & Halawi, A. (2017). The effects of HRM practices on organizational performance in Lebanese banks. *Journal of Global Business Advancement*, *10*(1), 62-88.

Creative Commons licensing terms
Author(s) will retain the copyright of their published articles agreeing that a Creative Commons Attribution 4.0 International License (CC BY 4.0) terms will be applied to their work. Under the terms of this license, no permission is required from the author(s) or publisher for members of the community to copy, distribute, transmit or adapt the article content, providing a proper, prominent and unambiguous attribution to the authors in a manner that makes clear that the materials are being reused under permission of a Creative Commons License. Views, opinions and conclusions expressed in this research article are views, opinions and conclusions of the author(s). Open Access Publishing Group and European Journal of Social Sciences Studies shall not be responsible or answerable for any loss, damage or liability caused in relation to/arising out of conflicts of interest, copyright violations and inappropriate or inaccurate use of any kind content related or integrated into the research work. All the published works are meeting the Open Access Publishing requirements and can be freely accessed, shared, modified, distributed and used in educational, commercial and non-commercial purposes under a Creative Commons Attribution 4.0 International License (CC BY 4.0).